HIKVISION

DS-K3G501C(L)X Series Tripod Turnstile

Quick Start Guide

UD43442B-A

User Manual

Wiring & Installation Video

Quick Start Flow Chart

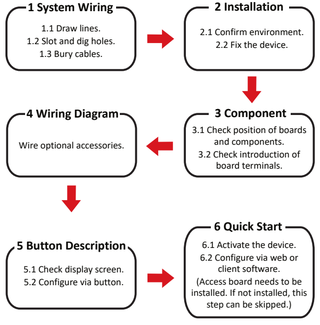

1 System Wiring

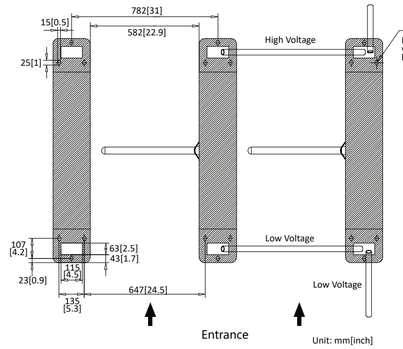

Steps:

1. Draw a central line on the installation surface of the left or right pedestal.
2. Draw other parallel lines for installing the other pedestals.
   - The distance between the nearest two lines is 782 mm.
3. Slot on the installation surface and drill installation holes after determining the hole positions. Put 4 expansion bolts of M12*150 for each pedestal.
4. Bury cables.

- High voltage: 100 to 240 VAC, 50 to 60 Hz AC power input
- Low voltage: network communication cable
- The inner diameter of the low voltage conduit and of the high voltage (AC power cord) conduit should be larger than 30 mm. If any high-power authentication device is required to install on the left pedestal, the diameter of its conduits should be larger.
- If you want to bury both of the AC power cord and the low voltage cable, the two cables should be in separated conduits to avoid interference.
- If more peripherals are required to connect, you should increase the conduit diameter or bury another conduit for the external cables.
- The external AC power cord should be double-insulated.
- The network cable must be CAT5e or other cables with better performance.
- Before digging holes, evaluate the thickness of the installation surface to avoid puncturing.
- You can not thread cables in the diagonal area.

2 Installation

Steps:

1. Prepare for the installation tools, check the components, and prepare for the installation base.
2. Drill holes on the ground according to the installation holes on the pedestals and insert the expansion sleeves.
3. According to the entrance and exit marks on the turnstiles, move the turnstiles over the pre-embedded expansion bolts.
4. Seal the bottom of the turnstile to avoid water from entering.
5. Secure the pedestals with expansion bolts.

- Make sure the device is installed on flat surface. The foundation should be hard and the thickness should exceeds the length of the expansion bolt.
- Make sure the device is powered off during installation and other operations.
- The installation tools are put inside the package of the pedestal.
- In order to prevent stainless steel from rusting due to dirt during the installation, it is recommended to tear off the protective film after the device is installed.
- There may be residual glue at the film cutting position, and it is recommended to wipe the glue with WD-40 protective liquid after tearing the film.
- Avoid immersing the pedestal in water. Under special circumstances, the immersion height should not exceed 150 mm.

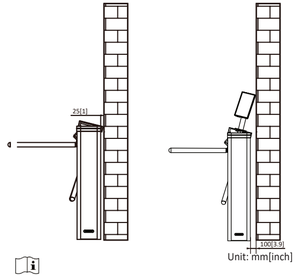

If the installation area is close to the wall, make sure the distance between the pedestal (without face recognition terminal) and the wall should be more than 25mm (100 mm for pedestal with face recognition terminal), or you cannot open the pedestal's top panel.

Dimensions

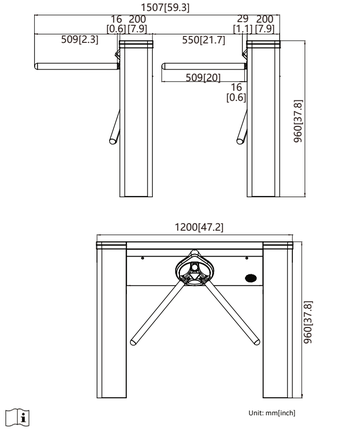

We recommend applying the models with power adapter to indoor scenarios.

3 Components Introduction

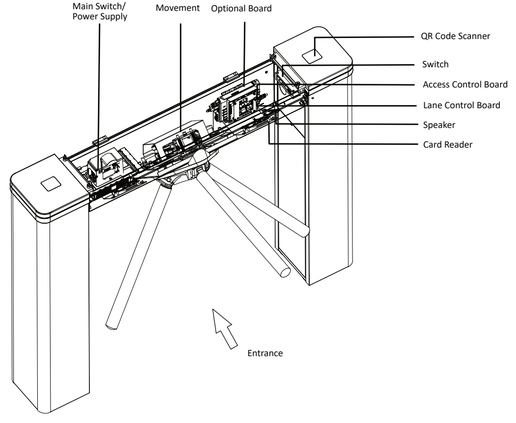

● **Lane Control Board (Front)**

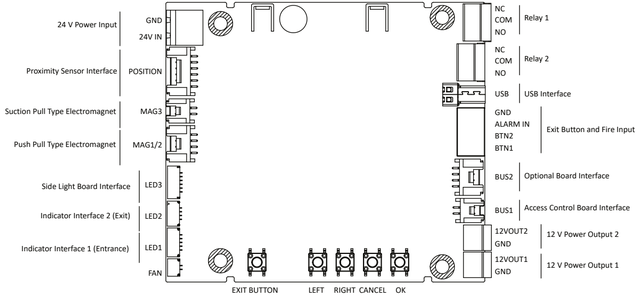

● **Lane Control Board (Rear)**

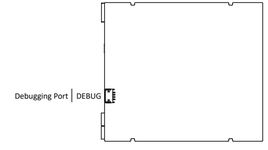

● **Access Control Board (Optional)**

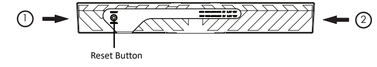

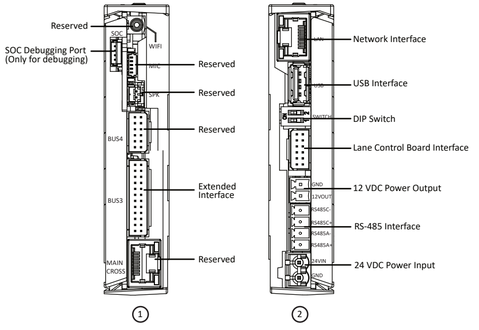

- Hold the reset button for 5 s, the device will beep for 3 s and start restoring to factory settings.
- RS-485A corresponds to port 3 on web and is for QR code scanner connection at entrance by default; RS-485B corresponds to port 4 on web and is for QR code scanner connection at exit by default; RS-485C corresponds to port 5 on web and is for card reader connection by default; RS-485D corresponds to port 6 on web and is for card reader connection by default.

Main Optional Board

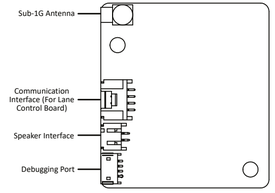

Card Reader Board (Optional)

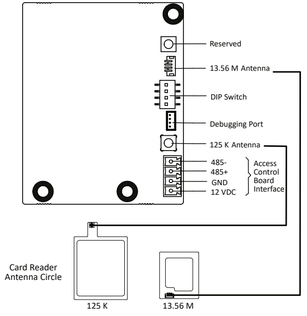

QR Code Scanner (Optional)

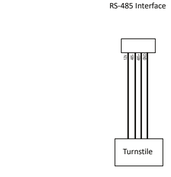

4 Wiring Diagram

- The power cable from main switch to the lane control board has been connected. You will need to prepare the 14AWG power cable to connect the AC power input to power supply.
- Barrier opens at the entrance/exit: connect to BTN1/BTN2 and GND.

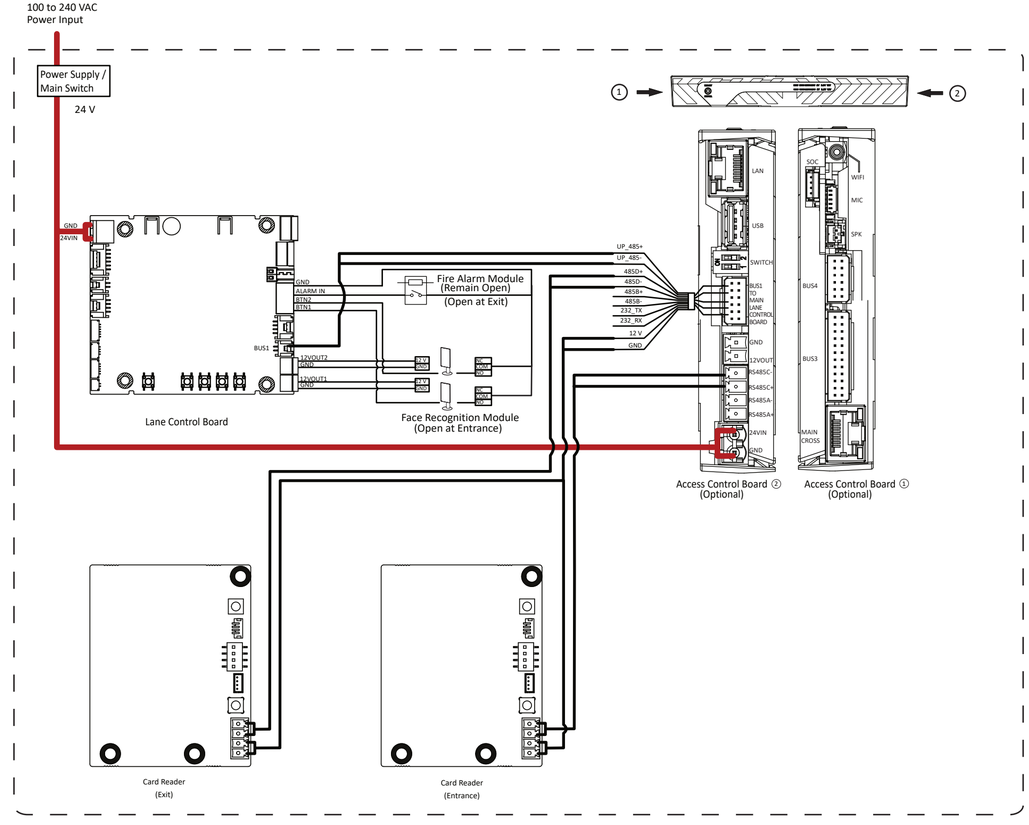

5 Button Description

Lane Control Board

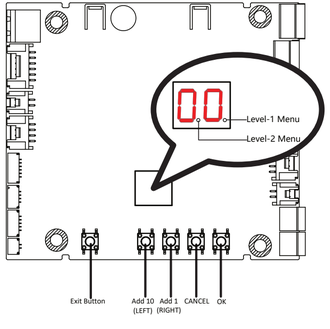

The buttons and the display screen are on the lane control board. You can configure device parameters such as passing mode, enter duration, etc.

Exit Button

Single press to open from the entrance.

Double press to open from the exit.

Configuration via Button

- Parameter Display

Parameter is displayed by two digital tubes on the screen.

- LEFT

Press the button to add ten to configuration data.

- RIGHT

Press the button to add one configuration data.

- CANCEL

Return to the level-1 menu, or exit the configuration from the level-1 menu.

- OK

Confirm the data, or enter configuration mode, or enter the submenu.

- Level-1 Menu

If the decimal point on the right is on, it indicates the level-1 menu. The number represents the configuration item number.

- Level-2 Menu

If the decimal point in the middle is on, it indicates the level -2 menu. The number represents the parameters of a configuration item.

Button Configuration Process

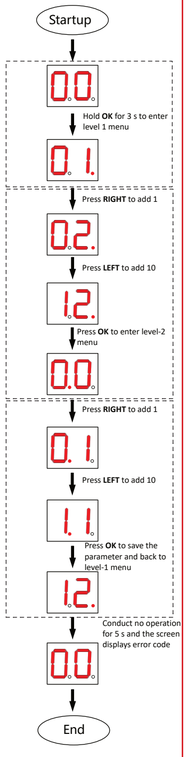

Enter the configuration mode. The number of 1 will show up on the right side of the screen and the device is ready for configuration.

Press **LEFT** and **RIGHT** to set the configuration No. Press **OK** to enter the level-2 menu and view the parameters. Press **CANCEL**, or conduct no operation for 5 s to cancel configuration.

Press **LEFT** and **RIGHT** to set the parameters at your needs. Press **OK** to save the change or press **CANCEL** back to configuration No. setting without saving changes. Conduct no operations for 5 s to cancel configuration.

Refer to the user manual for button description details.

6 Quick Start

Activation

Ensure the device and PC are on the same network segment.

- Enter the device default IP address (192.0.0.64) and create a new password (admin password) to activate the device.
- Activate device via client software.

- We highly recommend you create a strong password of your own choosing (using a minimum of 8 characters, including upper case letters, lower case letters, numbers, and special characters) in order to increase the security of your product. Characters containing admin and nimda are not supported.

Configuration via PC Web

Make sure the device is activated. Enter the device IP address in the address bar of the web browser and press Enter to enter the login page.
Enter the device user name and the password. Click Login.

Configuration via Client Software

After downloading the client software, you can conduct device management, group management, person management and access control management.

About this Document

- This Document includes instructions for using and managing the Product. Pictures, charts, images and all other information hereinafter are for description and explanation only.
- The information contained in the Document is subject to change, without notice, due to firmware updates or other reasons. Please find the latest version of the Document at the Hikvision website (https://www.hikvision.com). Unless otherwise agreed, Hangzhou Hikvision Digital Technology Co., Ltd. or its affiliates (hereinafter referred to as "Hikvision") makes no warranties, express or implied.
- Please use the Document with the guidance and assistance of professionals trained in supporting the Product.

About this Product

This product can only enjoy the after-sales service support in the country or region where the purchase is made.

Acknowledgment of Intellectual Property Rights

- Hikvision owns the copyrights and/or patents related to the technology embodied in the Products described in this Document, which may include licenses obtained from third parties.
- Any part of the Document, including text, pictures, graphics, etc., belongs to Hikvision. No part of this Document may be excerpted, copied, translated, or modified in whole or in part by any means without written permission.
- HIKVISION and other Hikvision's trademarks and logos are the properties of Hikvision in various jurisdictions.
- Other trademarks and logos mentioned are the properties of their respective owners.

LEGAL DISCLAIMER

- TO THE MAXIMUM EXTENT PERMITTED BY APPLICABLE LAW, THIS DOCUMENT AND THE PRODUCT DESCRIBED, WITH ITS HARDWARE, SOFTWARE AND FIRMWARE, ARE PROVIDED "AS IS" AND "WITH ALL FAULTS AND ERRORS". HIKVISION MAKES NO WARRANTIES, EXPRESS OR IMPLIED, INCLUDING WITHOUT LIMITATION, MERCHANTABILITY, SATISFACTORY QUALITY, OR FITNESS FOR A PARTICULAR PURPOSE. THE USE OF THE PRODUCT BY YOU IS AT YOUR OWN RISK. IN NO EVENT WILL HIKVISION BE LIABLE TO YOU FOR ANY SPECIAL, CONSEQUENTIAL, INCIDENTAL, OR INDIRECT DAMAGES, INCLUDING, AMONG OTHERS, DAMAGES FOR LOSS OF BUSINESS PROFITS, BUSINESS INTERRUPTION, OR LOSS OF DATA, CORRUPTION OF SYSTEMS, OR LOSS OF DOCUMENTATION, WHETHER BASED ON BREACH OF CONTRACT, TORT (INCLUDING NEGLIGENCE), PRODUCT LIABILITY, OR OTHERWISE, IN CONNECTION WITH THE USE OF THE PRODUCT, EVEN IF HIKVISION HAS BEEN ADVISED OF THE POSSIBILITY OF SUCH DAMAGES OR LOSS.
- YOU ACKNOWLEDGE THAT THE NATURE OF THE INTERNET PROVIDES FOR INHERENT SECURITY RISKS, AND HIKVISION SHALL NOT TAKE ANY RESPONSIBILITIES FOR ABNORMAL OPERATION, PRIVACY LEAKAGE OR OTHER DAMAGES RESULTING FROM CYBER-ATTACK, HACKER ATTACK, VIRUS INFECTION, OR OTHER INTERNET SECURITY RISKS; HOWEVER, HIKVISION WILL PROVIDE TIMELY TECHNICAL SUPPORT IF REQUIRED.
- YOU AGREE TO USE THIS PRODUCT IN COMPLIANCE WITH ALL APPLICABLE LAWS, AND YOU ARE SOLELY RESPONSIBLE FOR ENSURING THAT YOUR USE CONFORMS TO THE APPLICABLE LAW. ESPECIALLY, YOU ARE RESPONSIBLE, FOR USING THIS PRODUCT IN A MANNER THAT DOES NOT INFRINGE ON THE RIGHTS OF THIRD PARTIES, INCLUDING WITHOUT LIMITATION, RIGHTS OF PUBLICITY, INTELLECTUAL PROPERTY RIGHTS, OR DATA PROTECTION AND OTHER PRIVACY RIGHTS. YOU SHALL NOT USE THIS PRODUCT FOR ANY PROHIBITED END-USES, INCLUDING THE DEVELOPMENT OR PRODUCTION OF WEAPONS OF MASS DESTRUCTION, THE DEVELOPMENT OR PRODUCTION OF CHEMICAL OR BIOLOGICAL WEAPONS, ANY ACTIVITIES IN THE CONTEXT RELATED TO ANY NUCLEAR EXPLOSIVE OR UNSAFE NUCLEAR FUEL-CYCLE, OR IN SUPPORT OF HUMAN RIGHTS ABUSES.
- IN THE EVENT OF ANY CONFLICTS BETWEEN THIS DOCUMENT AND THE APPLICABLE LAW, THE LATTER PREVAILS.

Data Protection

- To protect data, the development of Hikvision Products incorporates privacy by design principles. For example, for Products with facial recognition features, biometrics data is stored in your Products with encryption method; for fingerprint Products, only fingerprint template will be saved, which is impossible to reconstruct a fingerprint image.
- As a data controller/processor, you may process personal data, including collection, storage, use, processing, disclosure, deletion, etc. You are advised to pay attention to and comply with applicable laws and regulations related to the protection of personal data, including without limitation, conducting security controls to safeguard personal data, such as, implementing reasonable administrative and physical security controls, conduct periodic reviews and the assessments of the effectiveness of your security controls.

© Hangzhou Hikvision Digital Technology Co., Ltd. All rights reserved.